Columbus Sconce LED

COL1 - Single
COL2 - Double

Project Name _____

Fixture Type _____

Quantity _____

Norwell | Lighting

ILEX

Custom Metalcraft

CITY LED Series

Columbus Sconce
COL1-PN/BN-CS

Columbus Double Sconce
COL2-PN/BN-CS

COL1

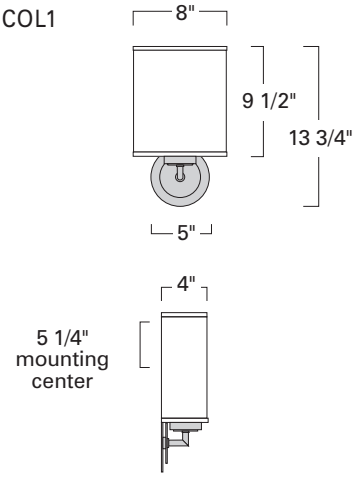

COL2

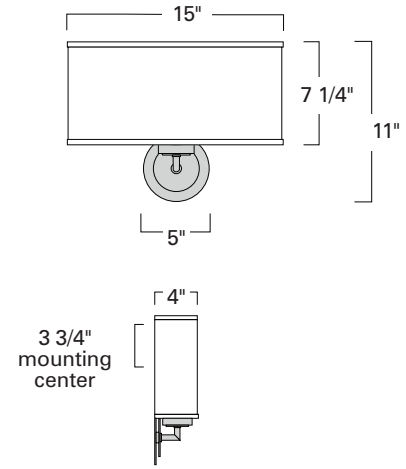

The City Series ADA products are available in a variety of styles and finishes.

LED ADA

Product Name / Model / Dimensions	Mounting Options	Diffuser Options	Finish Options	Lamping Options
Columbus Circle Single Sconce / COL1 Columbus Circle Double Sconce / COL2	Standard Wall Mount / WM	Standard Cream Linen Shade / CS Junction box located behind shade	Standard Architectural Bronze / AB Polished Brass / PB Satin Brass / SB Optional Brushed Nickel / BN Polished Nickel / PN	Standard LED / LED COL1 1296lm 3000K CCT, 80 CRI 22 Watts; 120v - 277v ELV dimmable (must specify 277v) COL2 2592lm 3000K CCT, 80 CRI 36 Watts; 120v - 277v ELV dimmable (must specify 277v) Optional Incandescent / IN COL1 - (1) 60W max candelabra E12 COL2 - (2) 60W max candelabra E12

	Height	Width	Projection
COL1	13 3/4"	8.00"	4.00"
COL2	11.00"	15.00"	4.00"

Dry Location Rated and UL/ETL Listed

1-2021

DISCLAIMER:
Norwell Lighting and its companies, ILEX Architectural Lighting and Custom Metalcraft reserve the right to change specifications related to its product at anytime. USA Made indicates product is manufactured in East Taunton, Massachusetts facility. Phone: 508-823-1751